Saving energy with pumps and fans

Huge amounts of energy can be saved in in the HVAC industry through the use of variable speed drives. A mere 20% drop in speed of centrifugal pumps and fans can save as much as 50% in energy. Yet, many buildings still use traditional mechanical devices to control system flow and therefore have considerable potential for saving energy.

Many heating, cooling and ventilation distribution systems operate at a constant flow rate, even though peak demand may only be required for a few hours. The conventional response to meeting the changing demand for heating and cooling within a building is to restrict flow to individual rooms, while maintaining peak flow in the central HVAC system. However, through the use of this approach, considerable energy is used and equipment lifetime is shortened.

A much better approach is to use a variable speed drive on HVAC pumps and fans to vary air or water flow to meet more precisely changing load demands.

Savings in running costs

Pumps and fans offer the best energy savings potential of any equipment in the building services industry. A fan running at 80% speed only uses 50% of the energy, compared to one running at full speed. Yet far too many pumps and fans run continuously at full speed, with the output regulated by inefficient throttling devices such as vanes or valves. A mere 20% reduction in fan speed can reduce energy consumption by up to 50%. Applied to a 75 kW motor in continuous duty, this means nearly £15,000 per year in saved energy – on one single application.

It is estimated that £1,000 million is spent each year on running electrical motors in commercial applications, excluding industry, in the UK. As much as 20% of this could be wasted through the use of inefficient throttling mechanisms.

Energy saving opportunities with variable speed drives

Variable speed drives are designed for optimum energy efficiency. Without a variable speed drive, the a.c. motor runs at full speed all the time. Variable speed drives enable the speed of pump and fan motors to be infinitely variable Drives operate by switching the fixed mains supply voltage to a variable voltage and frequency f in response to an electrical control signal. When coupled to a fan or pump motor, the change in frequency will result in a corresponding change in motor speed.

Variable speed drives are most commonly used on supply and extract fans for variable air volume systems, circulating pumps in hydronic systems and water booster-pumps in high-rise buildings.

In most cases, the motors are controlled to maintain a constant pressure within air ducts or water pipes. A pressure sensor in the pipe or duct measures the system pressure and as this changes sends a signal to the building automation system, which in turn sends a speed demand signal to the drive. Thus, as valves and dampers close, the pressure rises in the ducts or pipes, this in turn reduces the speed of the fan or motor.

Retrofitting

There are enormous opportunities for retrofitting drives in variable flow applications across the HVAC industry. It has been calculated that only one in four motors used in HVAC applications are controlled by an AC drive. This means that there are many pumps and fans that could benefit from being controlled by a variable speed drive.
Although the initial capital investment is often higher, the amount of energy saved by substituting inefficient control methods such as vanes and valves can result in large energy savings and short payback periods. Additional benefits include higher comfort levels for staff because of better temperature and ventilation control, along with lower noise levels and reduced maintenance costs

As an example, retrofitting boiler forced draft fans with variable speed drives could provide two distinct benefits:

Firstly, the use of a variable speed drive would provide a significant reduction in fan output, particularly

when the fan is operated at partial loads to accommodate boiler turn down.

Secondly, boiler fans with variable speed drives and sophisticated microprocessor based control systems can deliver simpler control strategies and improved performance.

Estimating running costs

Pumps and fans are the best applications for variable speed drive retrofits. The best way of determining the cost effectiveness of a potential variable speed drive retrofit is to look at the power needed at each operating condition firstly with and then without a variable speed drive.

Proposed energy savings can then be calculated by taking the reduction in power at each condition and estimating the savings based on the actual or expected operating time of that condition.

Examples of applications for variable speed control are those which: -

- Have a single large pump or fan rather than a series of staged pumps or fans that come on sequentially as the process needs increase
- Have variable flow, where throttling (by valves or dampers) provides the variation and where the majority of the operation is below the design flow.
- Where the operating hours are more than 8 hours per day

Energy audit

In order for a company to reduce energy costs, it needs to evaluate how it uses energy and in what way it can make its operations more efficient. Before you can make the savings you want, you need to establish just what your current energy usage actually is. This is usually done in the form of an energy audit.

An energy audit is a systematic examination of key pump and fan applications that include the monitoring of energy consumed both before and after the change to variable speed drives.

It defines where energy can be saved and quantifies how much energy can be saved with the installation of variable speed drives. These figures are then translated into a possible monthly saving, the amount of money that will be saved, in energy bills alone, if the equipment is installed.

Replacing existing drives improves efficiency

Existing drives should also be considered for replacement, even if they have not actually failed. An old drive could be costing money unnecessarily, compared to more modern and efficient products.

Today's drives are at least 3% more efficient than their predecessors. For example, a new 75 kW AC drive from ABB's new range would consume 6,704,082 kWh of energy, at a cost of £301,684, over a 10 year period. A 75 kW drive from the older SAMI STAR range would consume 6,915,789 kWh, at a cost of £311,211, over the same period. This is a saving of almost £1,000 per year.

Replacing old drives brings several benefits to the HVAC user:

- Increased energy efficiency
- Reduced running costs
- Frees up floor space

Variable speed drives not only decrease energy use as well as lessen the burden on the environment, they also qualify for the Government's Enhanced Capital Allowance scheme. This grants 100% capital write-off in the first year.

It is not unusual for user to dismiss the promise of 50% energy saving on a 20% speed reduction as the exaggerated claims of a manufacturer. However the savings can be verified and the best way to start is with an energy survey. This will enable you to see the potential savings in black and white, enabling you to make the decisions that bring your company improved profitability.

Efficient in all areas

Pumps, fans, compressors

Pumps, fans, and compressors are used in many different sectors, ranging from water supply and wastewater disposal to the chemical and pharmaceutical industries, oil refining and plastics production, and building technology. But no matter how different the requirements of the individual applications are, what counts most for the particular solution is its efficient implementation. See for yourself just how high the cost-saving potential can be when you use energy-efficient drive technologies in specific applications. And you can also find out just how fast the payback time is for an investment in a specific application – using the following calculation examples:

Pumps

For cost reasons, the delivery rate of a large water fountain operated with a 900-kW pump needed to be optimized depending on the time of day. A pump delivery rate of 100 percent is required when many people are around, 60 percent in the morning and evenings – and only 30 percent overnight. The SinaSave energy-saving program calculates in advance the savings when a frequency converter is used to control a pump's delivery rate.

Result

Energy costs reduced by: 58 percent

Return on investment: 490 percent

Payback time: Three months

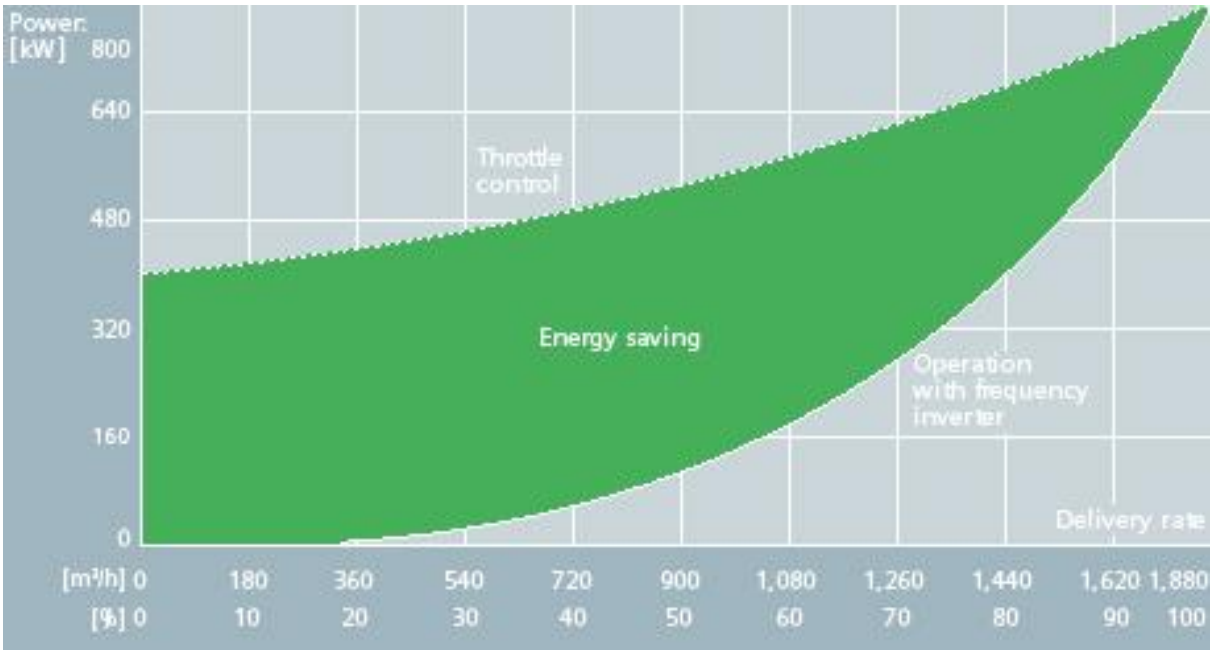

Comparison of throttle control versus converter, generated with SinaSave®. Energy cost savings using a pump as an example

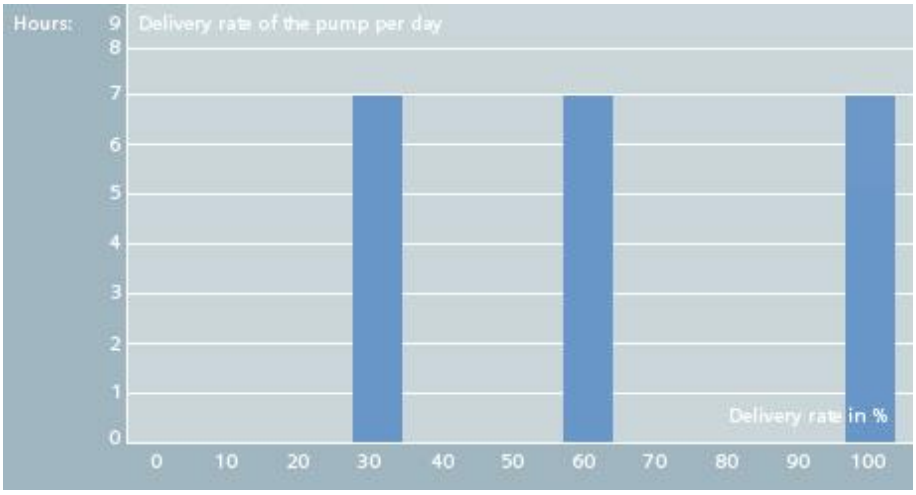

The pump in question is for a water fountain that, depending on the time of day, is operated with either the full delivery rate or a delivery rate reduced in stages. Summary: Dependent on the time of day

Fan

For an air-conditioning system in an office building, the SinaSave energy-saving program calculated the potential savings when a closed-loop speed control with a frequency converter is used to drive the fan that keeps the room temperature at the desired setpoint, as well as the fans used to maintain a constant air pressure in the offices.

Result

Energy costs reduced by: 68 percent

Return on investment: 215 percent

Payback time: Six months

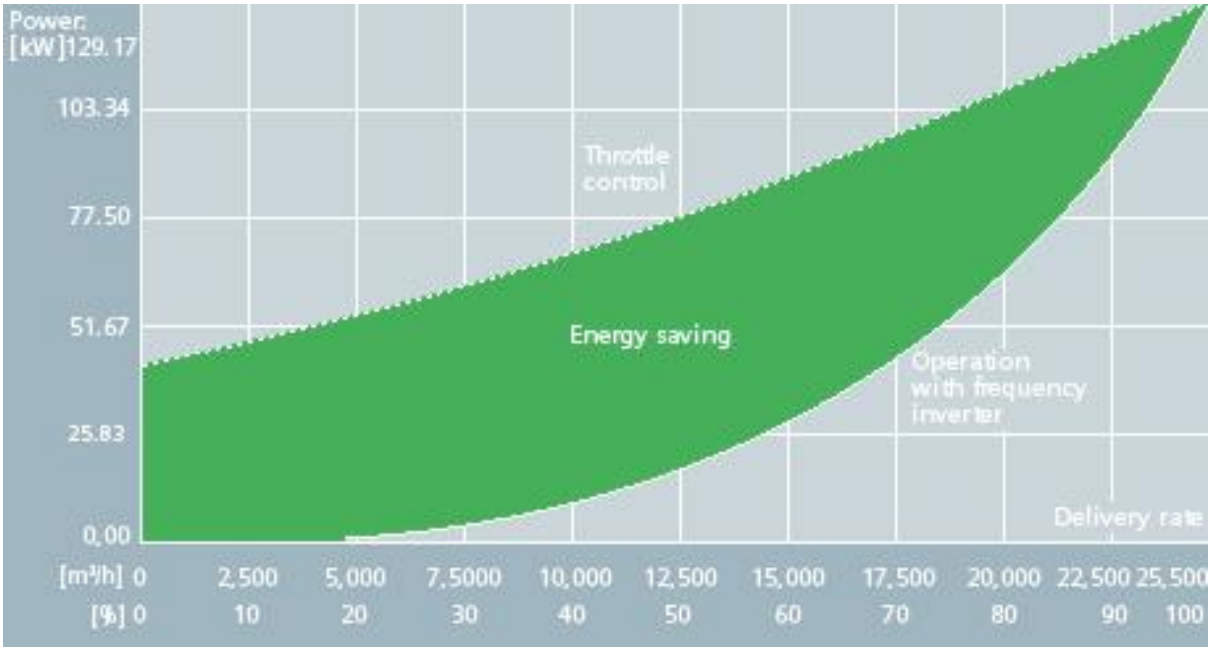

Comparison, throttle control versus converter, generated with SinaSave®. Energy cost savings using a fan as an example

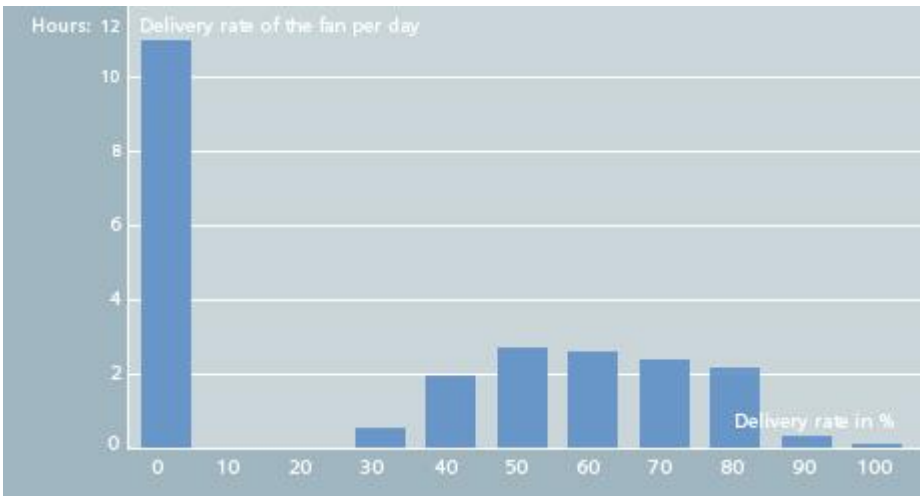

The fan in question is used in an air-conditioning system that is suitable for maximum temperatures However, on average in Central Europe, these high temperatures seldom occur in any given year. The flow rate of a typical fan first begins at approximately 30 percent. Summary: Temperature-dependent

Compressor

In a wastewater treatment plant, three radial compressors – each with a rating of 55 kW – blow air into so-called activation basins. This process removes organic dirt particles and ammonium from the pre-treated water. The SinaSave energy-saving program determined the cost savings when a frequency converter is used to control the speed of the compressors compared with the previous uncontrolled operation.

Result

Energy costs reduced by: 82 percent

Return on investment: 658 percent

Payback time: Two months

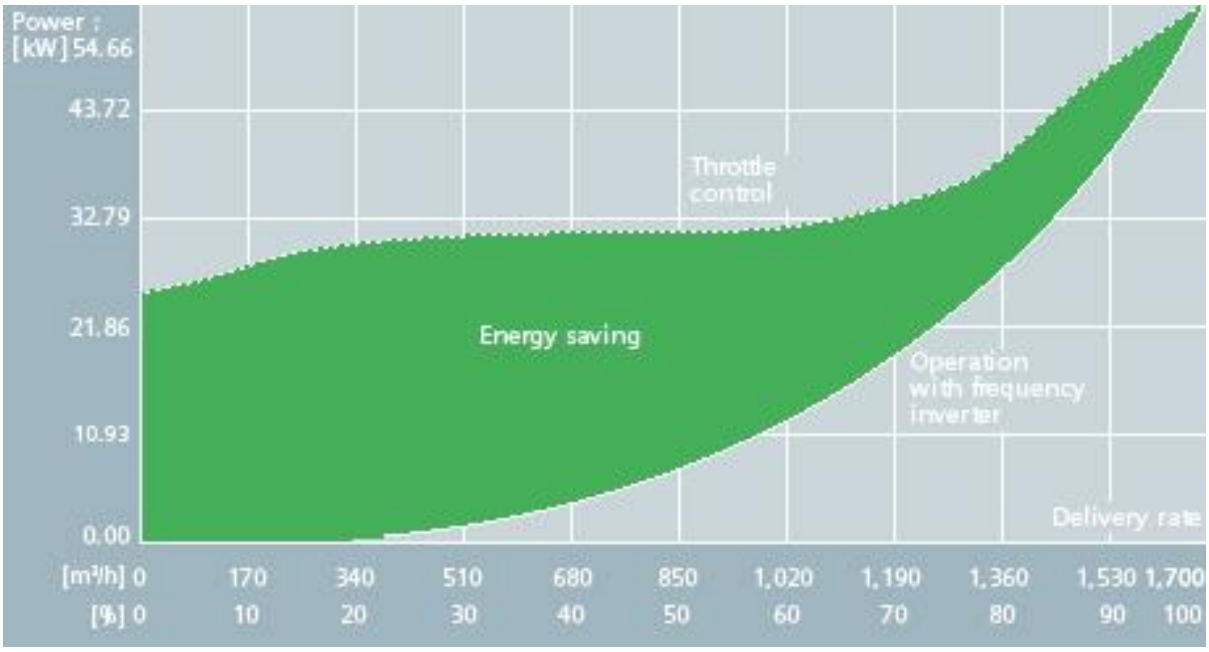

Comparison between control using a frequency converter and throttle control, generated using SinaSave® 3.0.

Energy cost savings using a compressor as an example

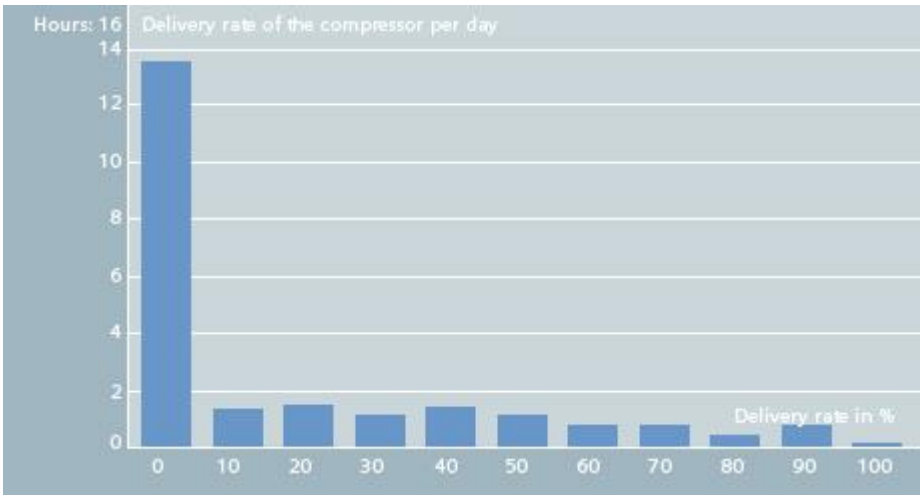

Values measured in a water treatment plant. The flow rate depends on the overflow from rainwater and what is pumped into the water treatment plant from private households. Summary: Usage-dependent

Frequency converters for fans & pumps

Life-cycle costs of a Fan or Pump investment

The initial purchase price of the equipment is just one small part of the total life-cycle cost of fans and pumps. Maintenance is a significant cost, but the majority of operating costs come from energy consumed. The Fig. represents the typical life-cycle costs of a pump. It shows that energy savings of up to 70% can have substantial effect on the cost-of-pump ownership. For fans, the typical life-cycle costs are very similar to those shown for pumps.

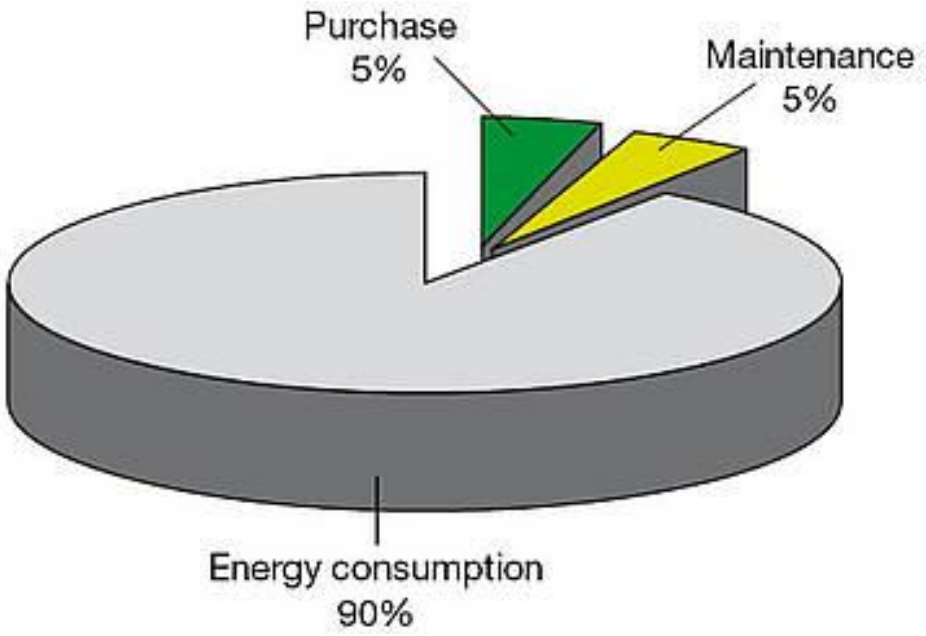

What is frequency inverter?

Most electric motors used in HVAC and water applications are "squirrel cage" motors, also called induction or asynchronous motors. Their popularity is due to their reasonable price, low maintenance costs and reliability. The only way to control the motor's speed is to change the frequency of the alternating current (AC) power in the input: this is where frequency inverter comes into the picture.

A frequency inverter is known by many names, such as variable frequency drive, frequency converter or adjustable speed drive. All mean essentially the same thing: an electronic device that provides stepless speed control in an electric motor. However, today's frequency inverters also feature other functionality, including control and protection to other equipment in the system.

Flow control methods in comparison to speed control
Other typical ways to control the flow are:

- Throttling control with dampers or valves.
- Using inlet vanes in centrifugal fans to restrict the flow of air into a fan.
- Using fluid or eddy current couplings to control the torque between the fan and the motor.
- On/Off control.
- Pitch adjustment with axial fans, where the angle of the fan blades is altered to change the flow.

The downside of traditional flow control is that none directly affects the main power consumer. There are possibilities to decrease the power consumption of some of these components, but none are as effective in energy efficiency as using speed control with a frequency inverter. For example On/Off control will generate much mechanical stress and pressure peaks due to both the extra starts and stops and the current peaks into the electrical supply when the motor is started without the use of frequency inverter.

As previously demonstrated, the savings from using frequency inverters should be considered when evaluating costs and payback times. CentraLine fan and pump savings calculators can assist in estimating the savings created by investment in frequency inverters. The calculators use the most typical traditional control methods, such as damper and vane control for fans or valves and on/off control for pumps, as the basis of comparison. The Fig. shows the starting view of the CentraLine fan savings calculator.

Energy savings with fan application

The example shows a savings calculation for a typical 5.5 kW centrifugal fan in air handling application comparing throttling control with dampers and the speed control with CentraLine frequency inverter.

The initial data needed for the calculator is:

- Gas input data: In HVAC application these can be left as default values since dealing with circulation of air.
- Fan data: Nominal volume flow and rated pressure increase can be obtained from the fan datasheet.
- Efficiency:
  - If possible, use real values; otherwise, default values give good estimations.
  - The fan in question is a direct-driven fan so transmission efficiency is 1.
  - CentraLine frequency inverters are typically as high as 0.98 efficient.

- Energy price should be the real price to provide the most accurate estimates.
- Hours of use per year are always estimated. This calculation assumes 80% use per year with typical operating cycles for air handling application.
- The cost difference in this calculation is an estimated price difference for this size of frequency inverter and damper system investment.

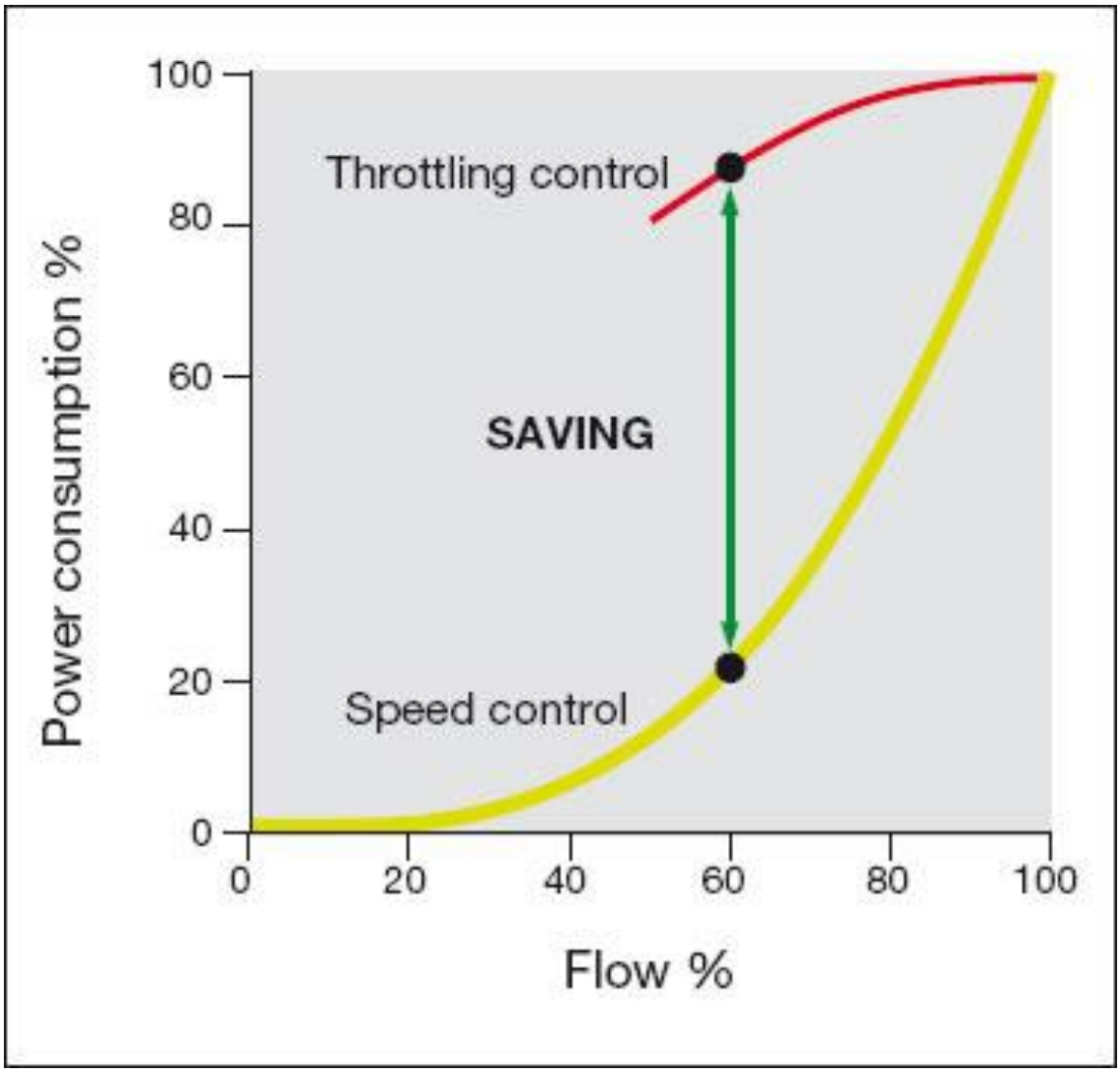

The results reveal annual savings in energy cost of 992 euros and a payback time of 0.65 years for the frequency inverter investment.

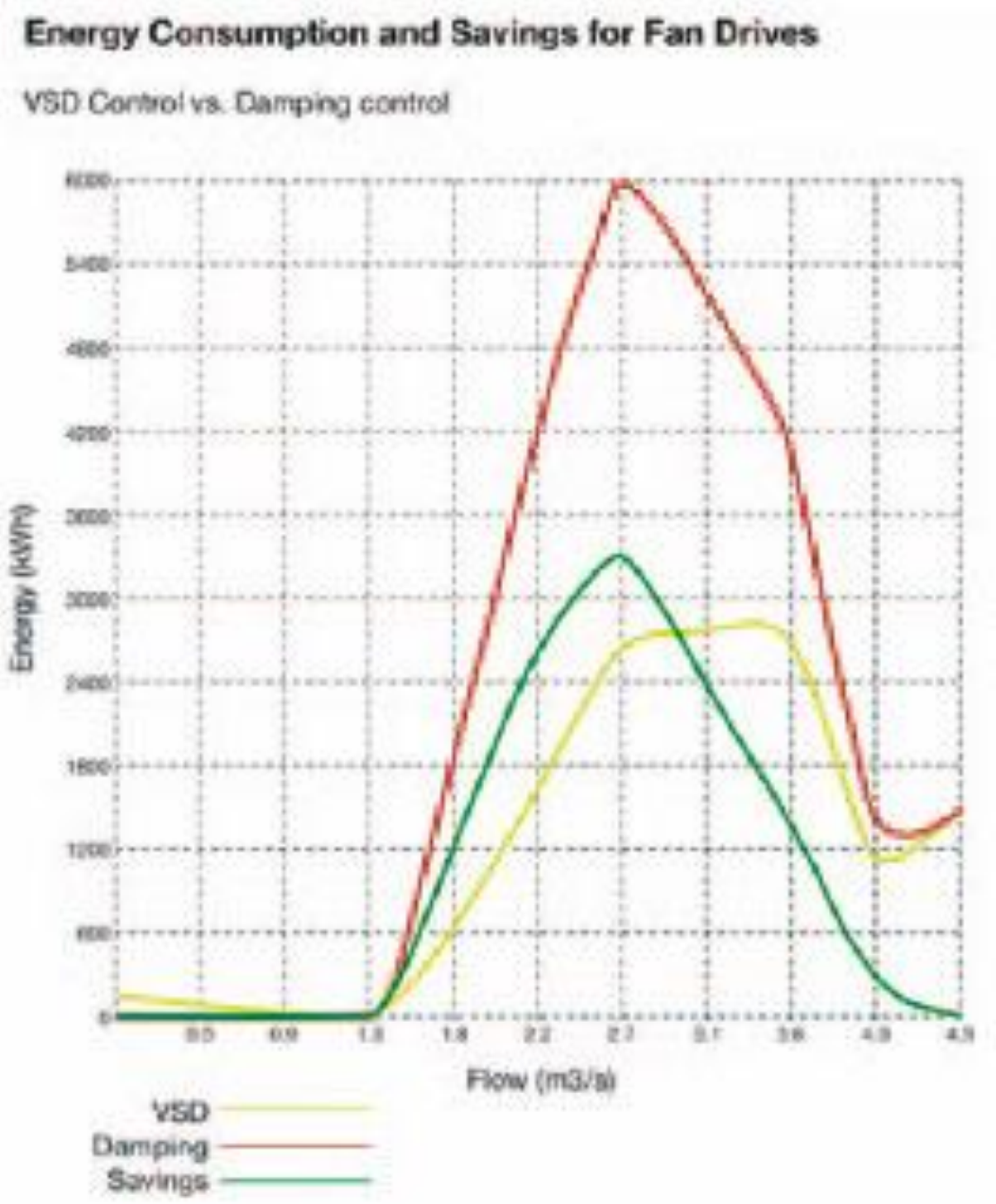

Cost savings with small frequency inverter in pump application

Here is shown a rough calculation comparing the investment of direct online connected and frequency inverter controlled pump system.

Alternative 1. Direct online (DOL) connected pump:
Pump and Motor (~3kW) 1000 Euro
Installation 1000 Euro
Total cost DOL: 2000 Euro

Energy 15 years
Consumption with DOL 394 200 kWh
Energy cost with DOL (9 sent/kWh) 35 478 Euro

Alternative 2. Solution with frequency inverter:
Pump and Motor (~3 kW) 1000 Euro
frequency inverter 800 Euro
Installation 1200 Euro
Total with frequency inverter: 3000 Euro

Energy 15 years (assumed 30% energy savings)
Consumption with frequency inverter 275 940 kWh
Energy cost with frequency inverter (9 sent/kWh) 24 834 Euro

Energy saving 15years: 118260 kWh
Energy cost saving 15years: 10643 Euro
Energy cost saving 1year: 709 Euro

Conclusion

Using frequency inverters in speed control of flow devices, such as pumps, fans and compressors, is not a new innovation. However, the new technology in these devices has made them even more attractive, due to their lower cost. There is much potential to save energy by using more variable-frequency control for electrical motors in HVAC systems. The technology will be a major contributor in meeting the demands from local and international agreements and norms for energy savings and for lower CO_2 emissions.

Frequency inverter for fans for energy saving

As the fan's static pressure Pst = 0, its energy saving principle can be represented by the diagram

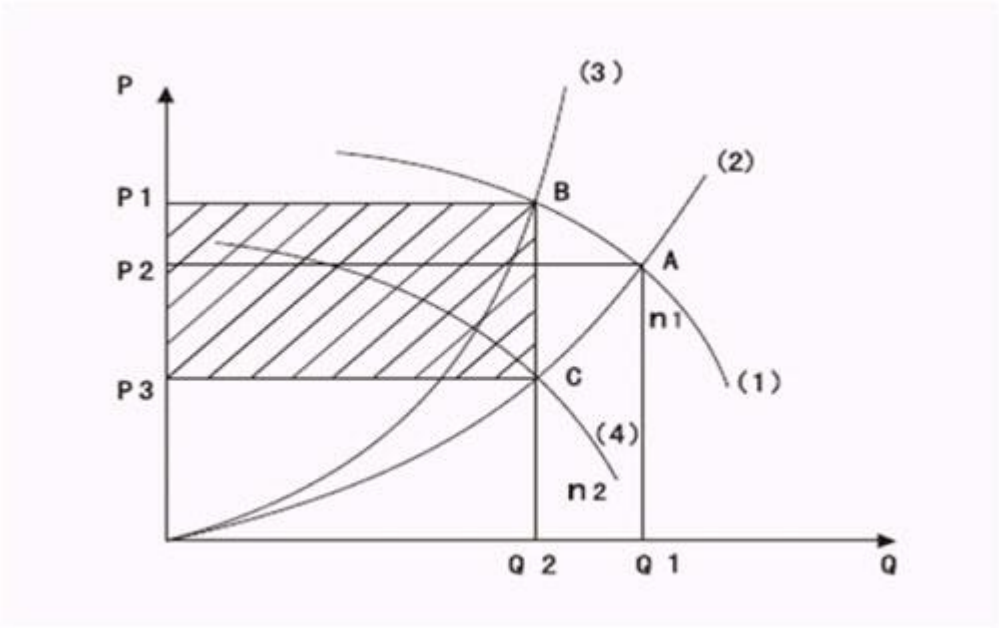

In the diagram, the curve (1) represents the wind pressure and wind quantity characteristics curve (P-Q) at rated speed N1. The curve (2) is the pipe network resistance characteristics curve when the air valve is widely open. The intersection A of the curve (1) and (2) indicates the point at which the motor runs with the highest efficiency. At this time, the wind pressure is assumed as P2, the wind quantity is Q1, and the axis power N1=k*Q1*P2, which can be represented by the area of AP2OQ1.

On condition that the wind quantity is to be decreased from Q1 to Q2 according to production requirements:
If adjusting the wind quantity by the valve, it will increase resistance of the pipe network, resulting in the pipe network resistance curve to change to the curve (3), and the intersection A change to B. At this time, the wind press is assumed as P1 and wind quantity is Q2, so the axis power N2 = k*Q2*P1, which can be represented by the area of BP1OQ2. Compared with AP2OQ1, it is easy to find out that the axis power decreases just a bit.

When adopting the frequency inverter to conduct speed adjustment, the fan speed will reduce from N1 to N2. As the fan's static pressure Pst=0, conforming to the similarity theorem, the wind pressure and wind quantity characteristics curve(P-Q) at the speed N2 can be represented by the curve (4), which converges the curve (2) at point C. At this time, the wind pressure is assumed as P3 and wind quantity is Q2, so the axis power N3=K*Q2*P3, which can be represented by the area of CP3OQ2. It is easy to draw a conclusion that N3 decreases steeply due to hefty decline of wind pressure.
Compared with the valve control mode, the frequency inverter can help save huge energy. The saved axis power ⊿N=K*(P1-P3)*Q2, which can be represented by the area of P1BCP3.

Frequency inverter in Fans & Pumps

Tags: inverter**,** AC drives

Benefits

Most fans and water pumps are selected according to its full loads working status, but in practice they are not working at the full load state in most of the time. So to control flow & air volume of the pumps & fans, it needs a wind deflector, reflux valve or start/stop timer usually, and the large power ac motors are very difficult in start/stop frequently as the electric impact is in a high level, during this time, it's absolutely will cause electric energy wasted and high current impact during start/stop of the ac motor.

To solve this kind of problem, the most scientific way is to adopt a Gozuk inverter (AC Drive) to control the fans and water pumps. When the AC motor operates at 80% of its rated rotation speed, in theory, the power consumption is the cube of 80% of its rated power, i.e. 51.2%. Generally, it can almost save 40% power consumption for the manufacturer when deduct the impact of mechanical loss and ac motor copper and iron loss. Plus, it can improve energy-efficient when the fan & pump adopt closed-loop constant-pressure control which can be achieved easily. Due to the inverter can realize soft start/stop for the ac motors, it can avoid voltage surge during the motor's start period to decrease the failure rate and increase its service life, and reduce the power system's capacity requirements and reactive power loss.

Energy Conservation Analysis

Through the fluid mechanics' basic principles, we know the fans and pumps are belong to square torque loads, the rotation speed n, flow Q, pressure H and shaft power P relation: Q?n, H?n2, P?n3, i.e., the flow is in proportion to its rotation speed, the pressure is in proportion to the square of its rotation speed, and the shaft power is in proportion to the cube of its rotation speed.

We now take the fan as an instance of the principle in energy conservation. As show in following fig, when the fan in its rated rotation speed, the air volume and air pressure change as curve 1, which intersects with the pipe network resistance curve 2 at the rated working condition point N when the air door is full opened; the air volume of the fan is Qn and the pressure is Hn. Normally, the working condition point is moved to point E by closing the regulation air door and increasing the resistance in ventilation pipe network. At this moment, the air volume is decreased to Qe and the generated pressure head is He. If the air volume is regulated by reducing the rotation speed of the fan, the fan will operate as curve 4, and re-generate required air volume Qe, it will intersect with the pipe network resistance curve 2 at the working condition point C when the air door is full opened.

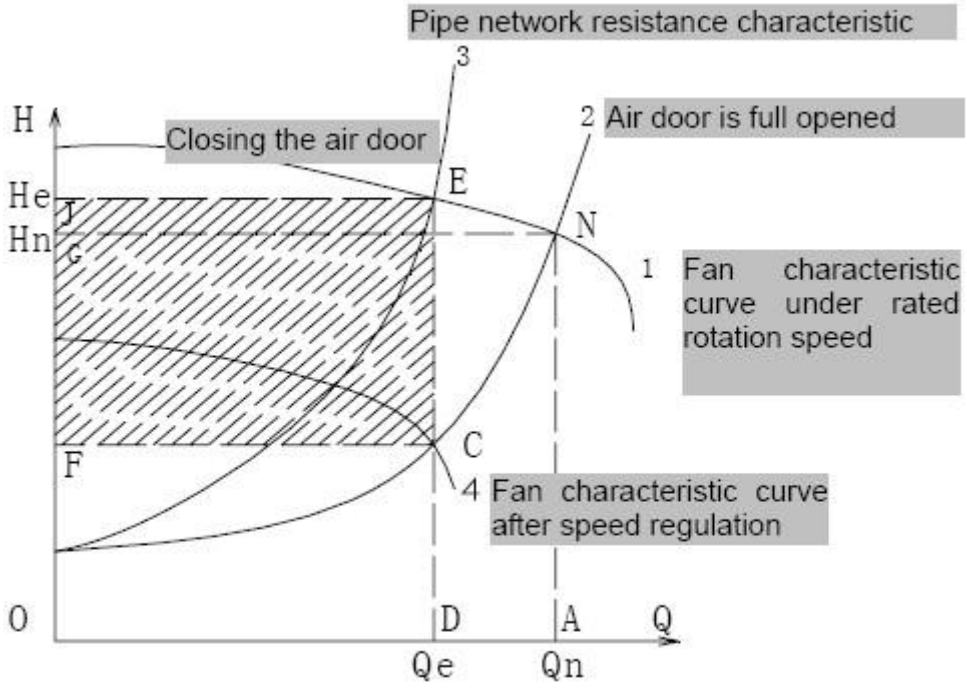

FIG.1. Fan Characteristic Curve

According to the similar principles between fan and water pump, the air volume, rotation speed and power accordance with the following formula:

$$\frac{Q_2}{Q_1} = \frac{n_2}{n_1} \qquad \frac{n_2}{n_1} = \sqrt{\frac{H_2}{H_1}} = \sqrt[3]{\frac{N_2}{N_1}} \qquad N_2 = N_1\left(\frac{n_2}{n_1}\right)^3$$

Q1 — air volume of the fan before regulation, m3/h;
H1 — pressure head of the fan before regulation, Pa;
n1 — rotation speed of the fan before regulation, r/min;
N1 — shaft power of the fan before regulation, KW;

Q2 — air volume of the fan after regulation, m3/h;
H2 — pressure head of the fan after regulation, Pa;
n2 — rotation speed of the fan after regulation, r/min;
N2 — shaft power of the fan after regulation, KW.

According to similar principles, when the rotation speed of the fan reduce to n2 from n1, the shaft power of the fan N2 will be reduced to N1 multiply (n1/n2)3; the shaded area in the FIG.- the area covered by JECF represents the saved electric quantity by reducing rotation speed compared with closing the air door to regulate the same amount of air volume. Both theory and actual measurement prove that it will cause waste of electric energy by manual increasing ventilation resistance (closing the valve) to regulate the air volume, which is unacceptable.

If Variable frequency technology is adopted to change the rotation speed of pumps and fans to control other process control parameters on the field such as pressure, temperature and water level, the comparison results mentioned above can also be obtained by drawing the relation curve in accordance with the system control characteristics. In other words, the method to adopt variable frequency inverter to change the rotation speed of ac motor is more energy and cost efficient than by using valve and damper, and the operating condition of the equipment is also

significantly improved.

Variable Frequency Reform Solution

1. Main Circuit Diagram:

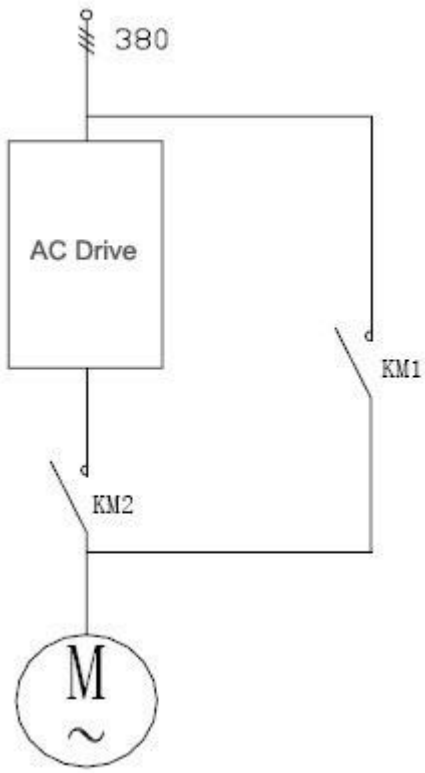

As shown in the above FIG., keep the original system but add the inverter part, All motors in the system are driven by corresponding inverters, and when the inverter failed, the system can working in power frequency as the original control system to ensure continuous production in the factory.

2. Control Circuit

A. Manual regulate (open-loop regulation) system, adjust output frequency of the inverter in manual control mode to change the rotation speed of the fan & pump to regulate air volume & water volume. It's same as original method of regulating the air door (gate valve).

B. Automatic regulate (closed-loop regulation) system:

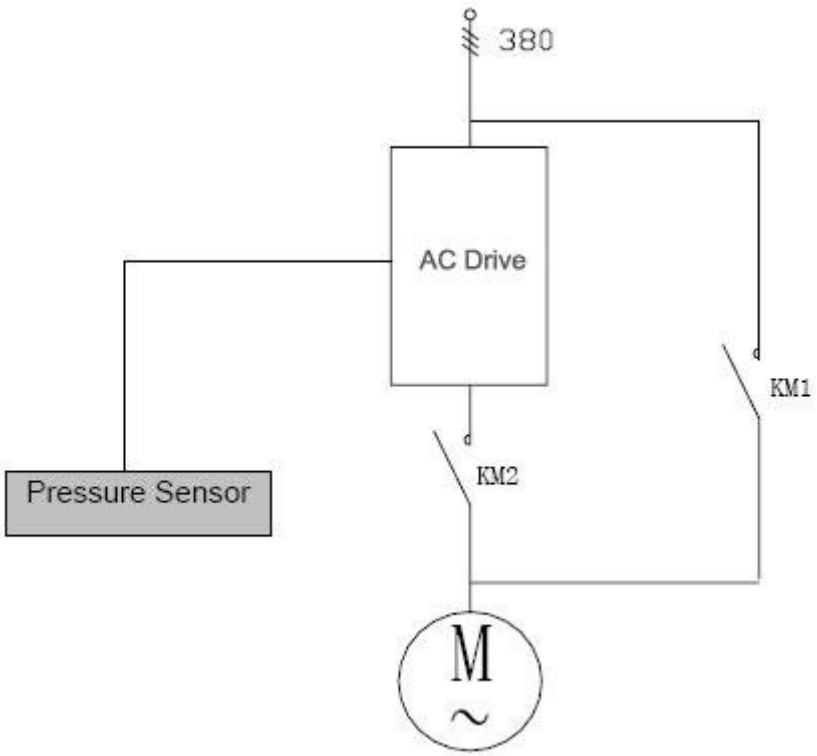

As shown in above FIG., the automatic control system adopts closed-loop regulation which is consisted of the inverter's built-in PID function with external pressure sensor or pressure gage. The sensor detects air pressure or water pressure in real time and transforms it into 4-20mA current signal (or 0-10V voltage signal), and sends it to the PID regulator, and through internal calculation of the inverter, automatic regulate the frequency of the inverter to stabilize the air volume or water pressure at the set value.

3. Main features of vector control inverter in Fan and Water Pump application
The frequency inverter is a product special designed for load with square torque like in fan and water pump applications, cost effective and reliable, it's an ideal choice for your energy saving system.

- Wide range operation voltage, fluctuation range in 304 - 456V AC
- Special rotation speed tracking technology with no impact
- Several V/F curves in setting
- Multi-function input/output terminals with Multi-path definable function
- Re-start function in instant power off
- Built-in RS 485, support MODBUS-RTU communication protocol
- Stable start, suitable for high-inertia load's speed regulation
- Easy to realize closed-loop automatic operation with advanced built-in PID algorithm

System characteristics after reform

1. Realize AC motor soft start/stop by adopting inverter control, to increase the equipment's service life and avoid impact on the power system.
2. Control the AC motor's rotation speed by the inverter, remove the damper adjustment to decrease failure rate of the application, and increase electricity saving significantly.
3. The ac motor operates below rated rotation speed, to decrease impact of noises to the environment.
4. Do not affect original power facilities & environment during installation to allow continuous production.
5. Enhance overload, overvoltage, overcurrent, undervoltage and voltage phase lack protection functions, and audible and visual alarm function;
6. Due to keep the original system wiring and make the system have two working modes in normal power frequency & variable frequency power, the whole system operate in a more reliable situation.

Smart drives for fans and pumps

Recent variable frequency pump and fan drives from ABB save energy, compared to other flow-control methods such as throttling. Additional efficiencies come from monitoring, analyzing, and optimizing system operation

The ACS310 is intended to install and get up and running fast, particularly when it is to drive pumps and fans. The addition to ABB's ac drive family ranges from 200 to 480 Vac, 0.5 to 30 hp (0.37 kW to 22 kW). The drive has features for pumps and fans– complemented with advanced, energy efficiency.

"This compact, easy-to-use drive offers the most advanced pump-and-fan features and pump-protection functions," says Greg Semrow, ABB LV Drives product manager.

The ACS310 comes standard with two independent, built-in PID controllers for regulating pressure, flow, or other quantities. The PID control is widely used in automation and process industries. Applications include motor-speed control in various conveyors, pressure and temperature controls in ventilation systems, flow control in pumping systems, and different kinds of level-control applications. The second PID controller can eliminate need for an external PID controller, help improve process quality, and save energy and up-front costs.

Pump and fan control (PFC) switches auxiliary pumps on-and-off as required as capacity changes. An Auto-change function (when enabled and with the appropriate switchgear) alternates a pair of pumps on the same line to equalize their duty times. With the PFC feature, one drive controls several pumps or fans in parallel. Auto-change periodically increments the position of each motor in the rotation – that is, a speed-regulated motor becomes the last auxiliary motor, and the first auxiliary motor becomes the speed-regulated motor. An interlock function lets the drive detect when any of the pumps are unavailable, switched off for maintenance, for example. In which case, it starts the next available pump.

Soft pump and fan control (SPFC) is used for pump and fan alternations in which lower pressure peaks are required when a new auxiliary motor is connected online. SPFC is an easy way to implement soft starts for direct on line (auxiliary) motors. The difference between traditional PFC and SPFC is the way SPFC connects auxiliary motors online – with a flying start, while the motor is still coasting. Thus, in some cases, SPFC makes it possible to soften the start-up current while bringing auxiliary motors online. SPFC control requires the Auto-change function and appropriate switchgear.

The ACS310 comes standard with advanced pump protection functions such as Pipe Fill, a pre-programmed control method to start a pump system and fill pipelines. Pipes fill smoothly with fluid before activating closed-loop control. Pump Cleaning executes pre-programmed cleaning sequence for pumps at drive start or when required with some other source, such as digital inputs or current/torque limits. A Pump Cavitation function allows monitoring pump inlet and outlet pressures through external sensors. And a Pump Protection function can generate an alarm, provide protection during the event, or trip the drive on a fault.

The drives also have built-in energy efficiency counters that calculate the energy savings of the application in kWh and MWh — the cost of the energy saved in a local currency. The ACS310 includes other efficiency features, such as a built-in statistical tool, Load Analyzer, which saves process data, (current and torque values for instance) that can be used to analyze the pump's energy efficiency. An energy optimizer optimizes flux so that the total energy consumption and motor-noise level are reduced when the drive operates below the nominal load. The total efficiency of the drive system can be improved up to 10%, depending on load torque and speed.